PRODUCT SUBMITTAL

AtmosAir FC100

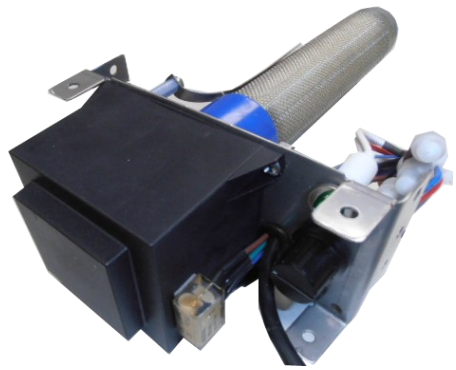

APPLICATION

The AtmosAir FC100 ionization system is intended to be mounted in the supply discharge in smaller air handling systems such as fan coils, heat pumps and other unitary type systems. The system can be integrated on an OEM basis, or a retrofit package is also available. Access to the unit's control panel is provided. The unit will be calibrated at the factory per AtmosAir recommendations or the contractor will calibrate the ionization setting to attain ion level readings of between 350 and 1,500 negative ions/cm^3 in the space.

SPECIFICATIONS

Air Flow Capacity…..……..…….....up to 2400CFM
Pressure Drop……..……..….Minimal (see Fig. 1)
Housing Material……..…22 Gauge Stainless Steel
w/ integral universal mounting bracket.
Weight…… 4.25 pounds
Maximum Operation Temperature……..……..150° F (65.5° C)

ELECTRICAL

Voltage……..115/240VAC
Frequency……..……..50/60 Hz
Power Consumption……..…….....5 watts
Current Draw……..……..0.2 Amps
Internal Fuse……..…. 1.25 Amp
Field Electrical Connection……..……....Integrated into AHU

IONIZATION TUBE

Material……. Multi-Core Composite
Number……..……...…....One (1)
Size……C(8") D (10") E (15")
Tube Life……..…….....17,600 Hours
Options: Air Switch, China Standard Plug Available

DIMENSIONS……see Figure 2

APPROVALS

ETL [UL 1995:2015 Ed.5] [CSA C22.2#236:2015 Ed.5]
[UL 867:2011 Ed.5 +R:07Aug2018] [UL SUBJECT 867A:2014 Ed.1]

FIGURE 1

Duct Size (Inches)	Pressure Drop (Pa) for various CFM		
	250	500	1000
36 X 36	0	0	0
24 X 24	0	0	0
18 X 18	0	10	10
16 X 16	10	10	20
12 X 12	80	160	810

Duct Velocity (fpm)

FIGURE 2

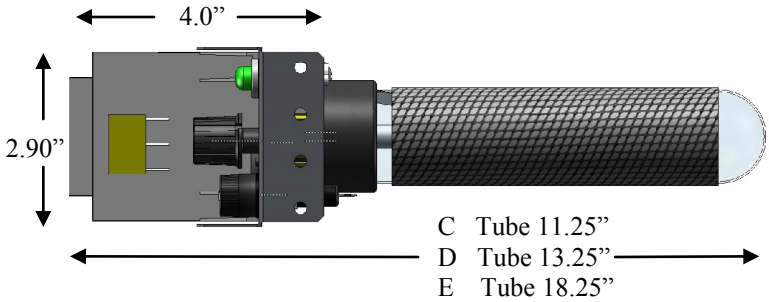

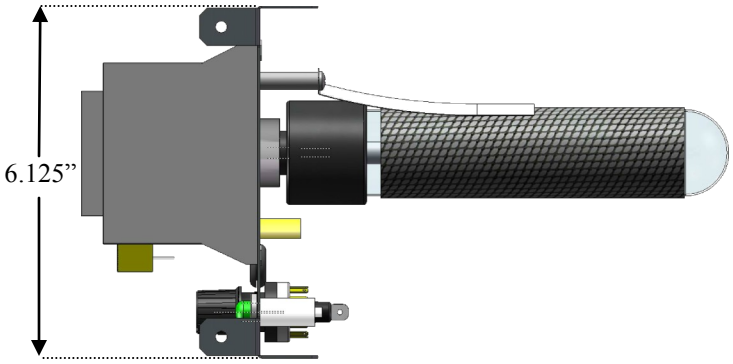

AtmosAir Solutions™
418 Meadow Street, Suite 204 Fairfield, CT 06824
--
2115 E. Cedar Street, Suite 6 Tempe, AZ 85281
Phone: 203-335-3700 (CT) / 480-629-4784 (AZ)
Fax: 203-335-1075
www.AtmosAir.com